MODEL 502 SCHMATICS

| OHIO SCIENTIFIC | | | product name/number 502 SCHMATICS | |
|---|---|---|---|---|
| date | revision | page | status | sheet of |

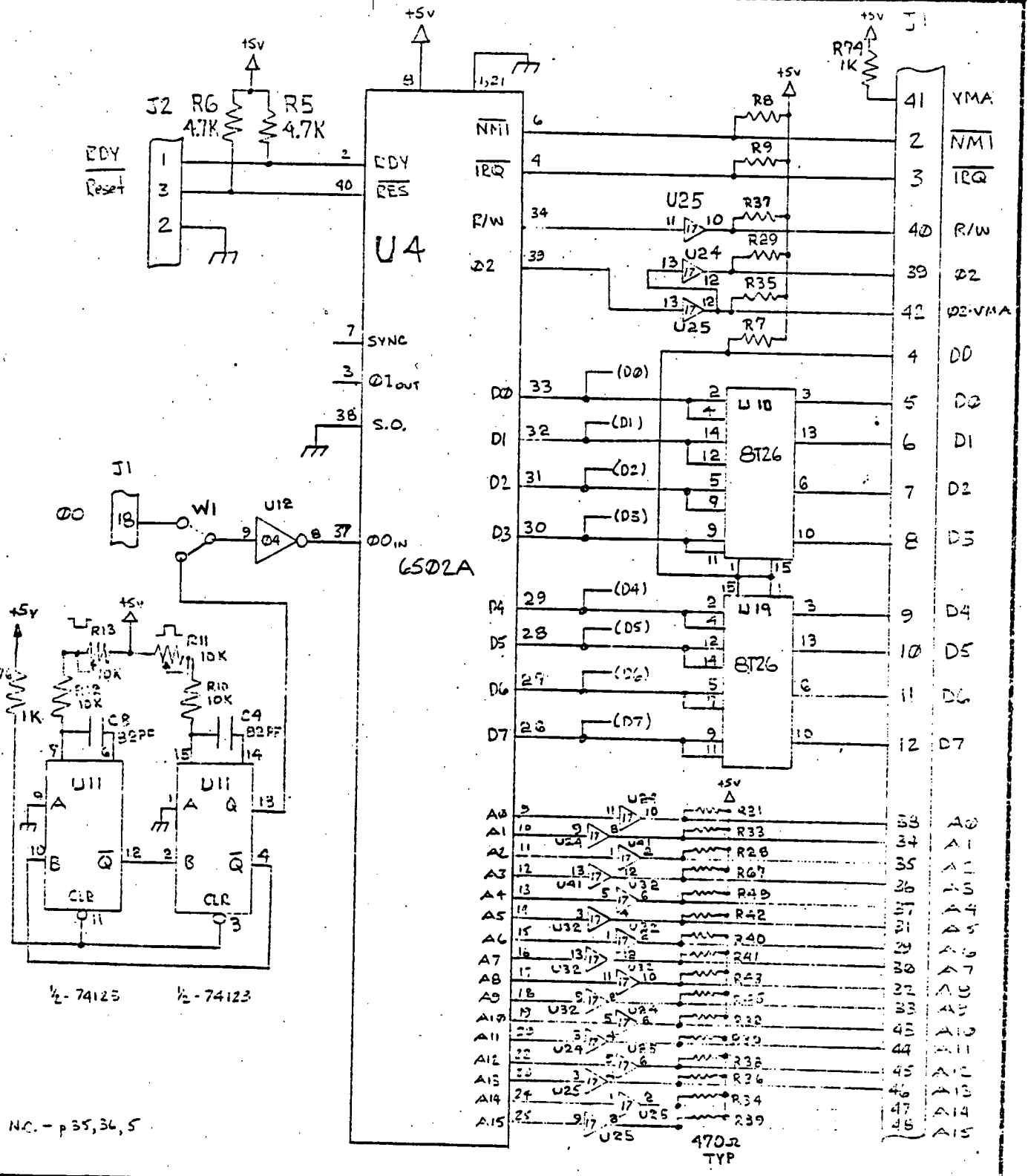


| OHIO SCIENTIFIC | product name/number MODEL 502- µP AND CLOCK | | | |
|---|---|---|---|---|
| date | revision | page | status | sheet 1 of 12 |

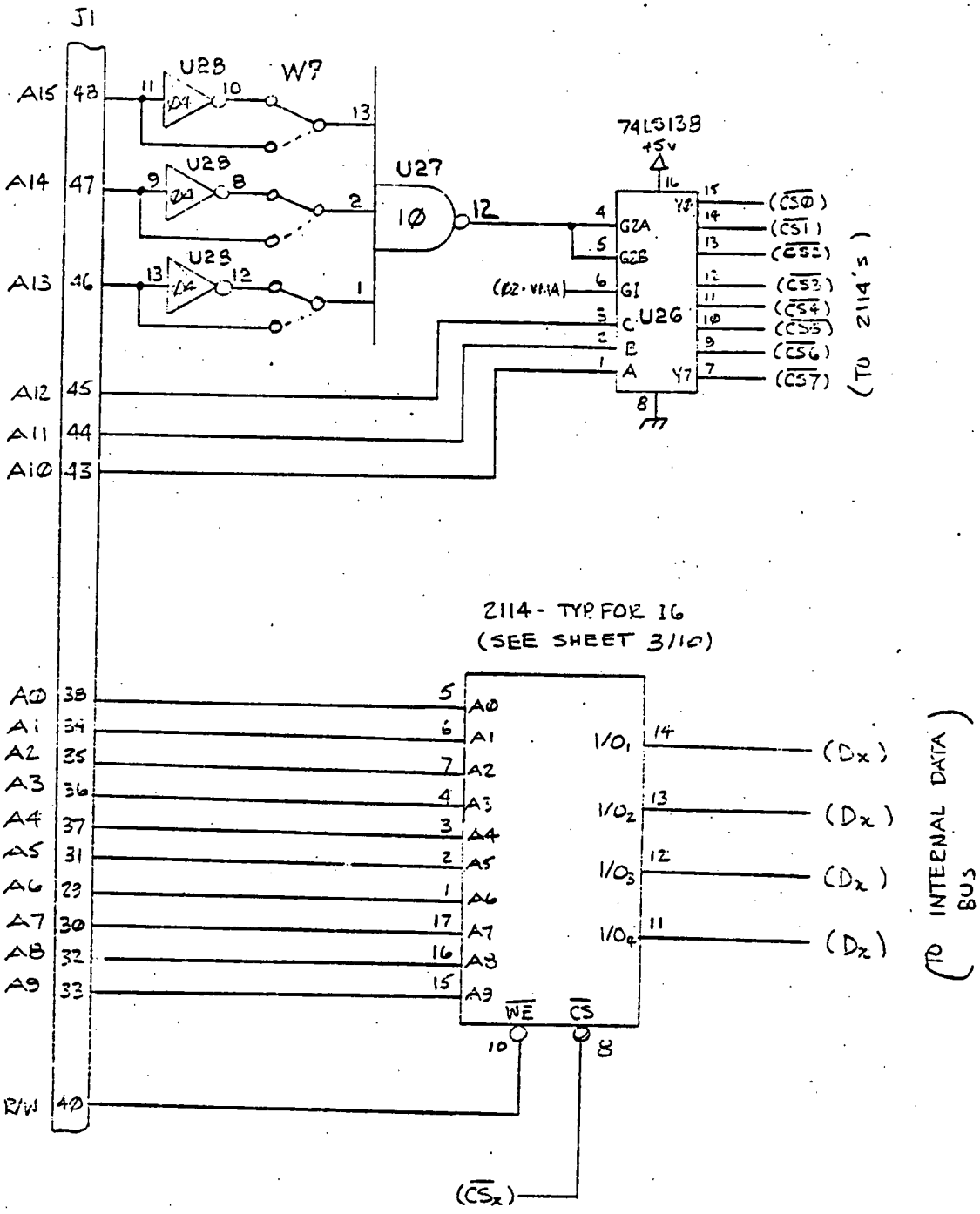


| OHIO SCIENTIFIC | | | product name/number MODEL 502 – (RAM) | |
|---|---|---|---|---|
| date | revision | page | status | sheet 2 of 12 |

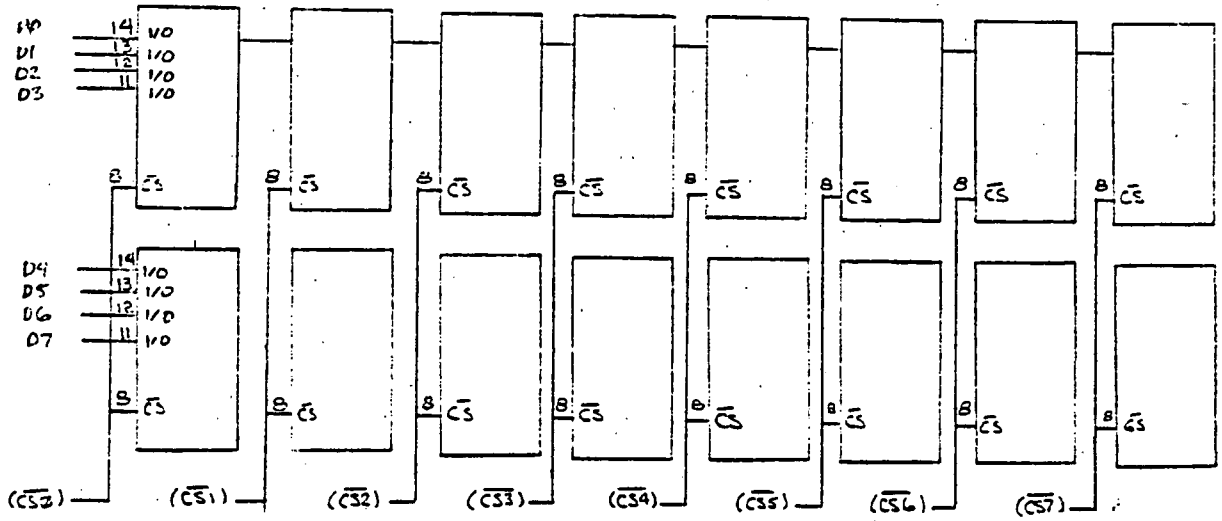


2114 - RAM CHIPS

NOTE - A0-A9 & R/W ARE BUSSED TO ALL CHIPS.

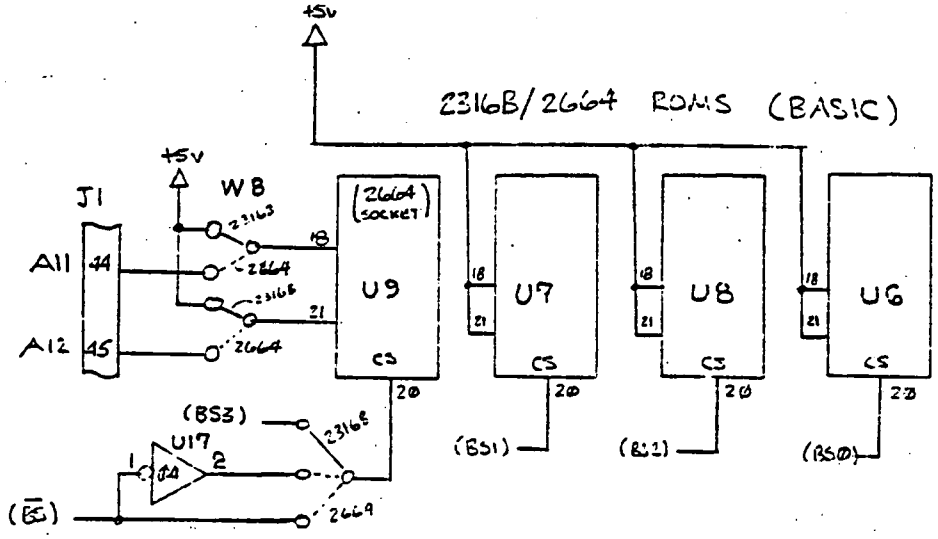


NOTE - ALL OTHER LINES AS ON SHEET 6/10

| OHIO SCIENTIFIC | product name/number: MODEL 532 - (RAM & ROM AREAS) | | | |
|---|---|---|---|---|
| date | revision | page | status | sheet 3 of 12 |

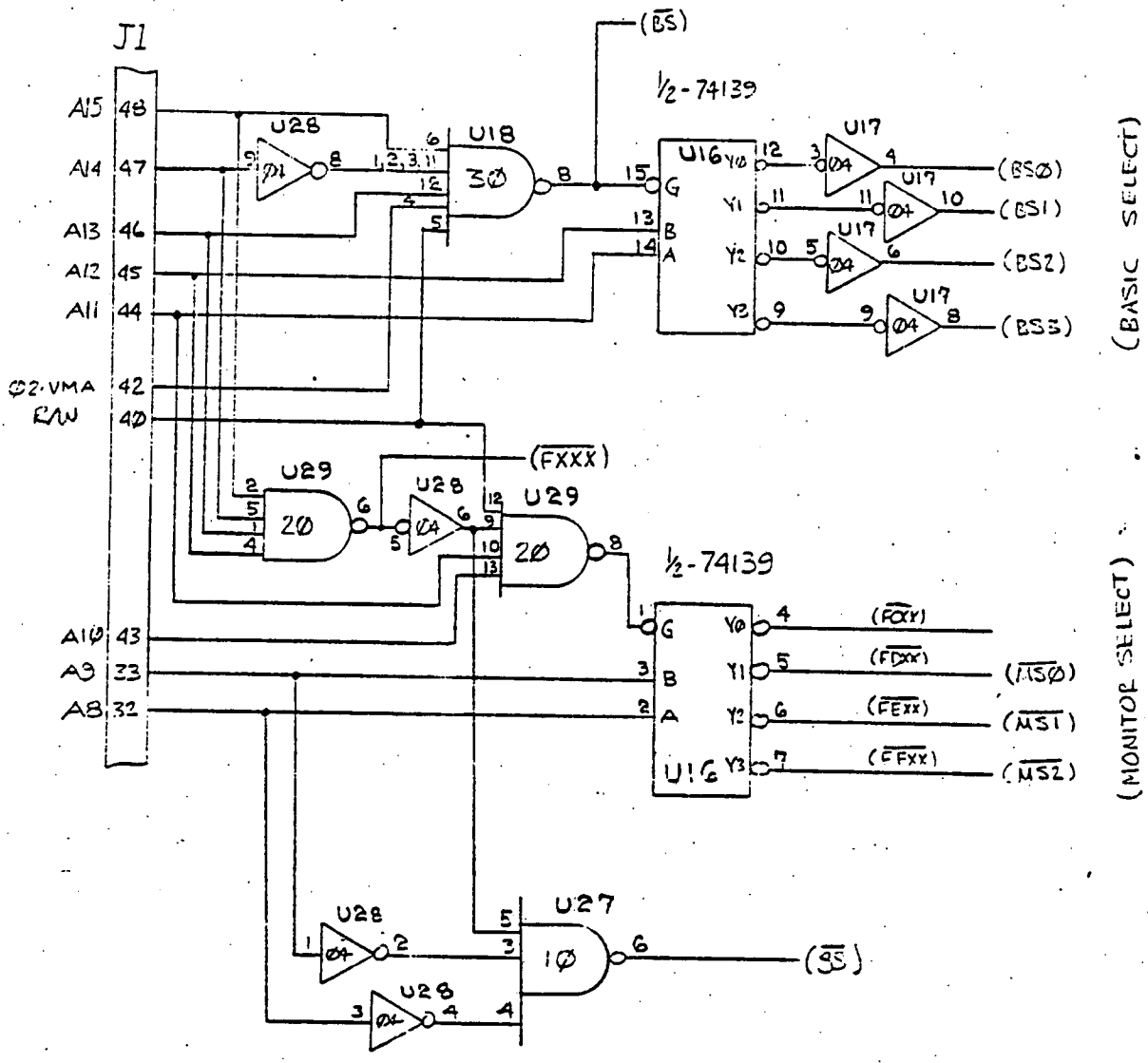


| OHIO SCIENTIFIC | | | product name/number MODEL 502 - (ROM ENABLES) | |
|---|---|---|---|---|
| date | revision | page | status | sheet 4 of 12 |

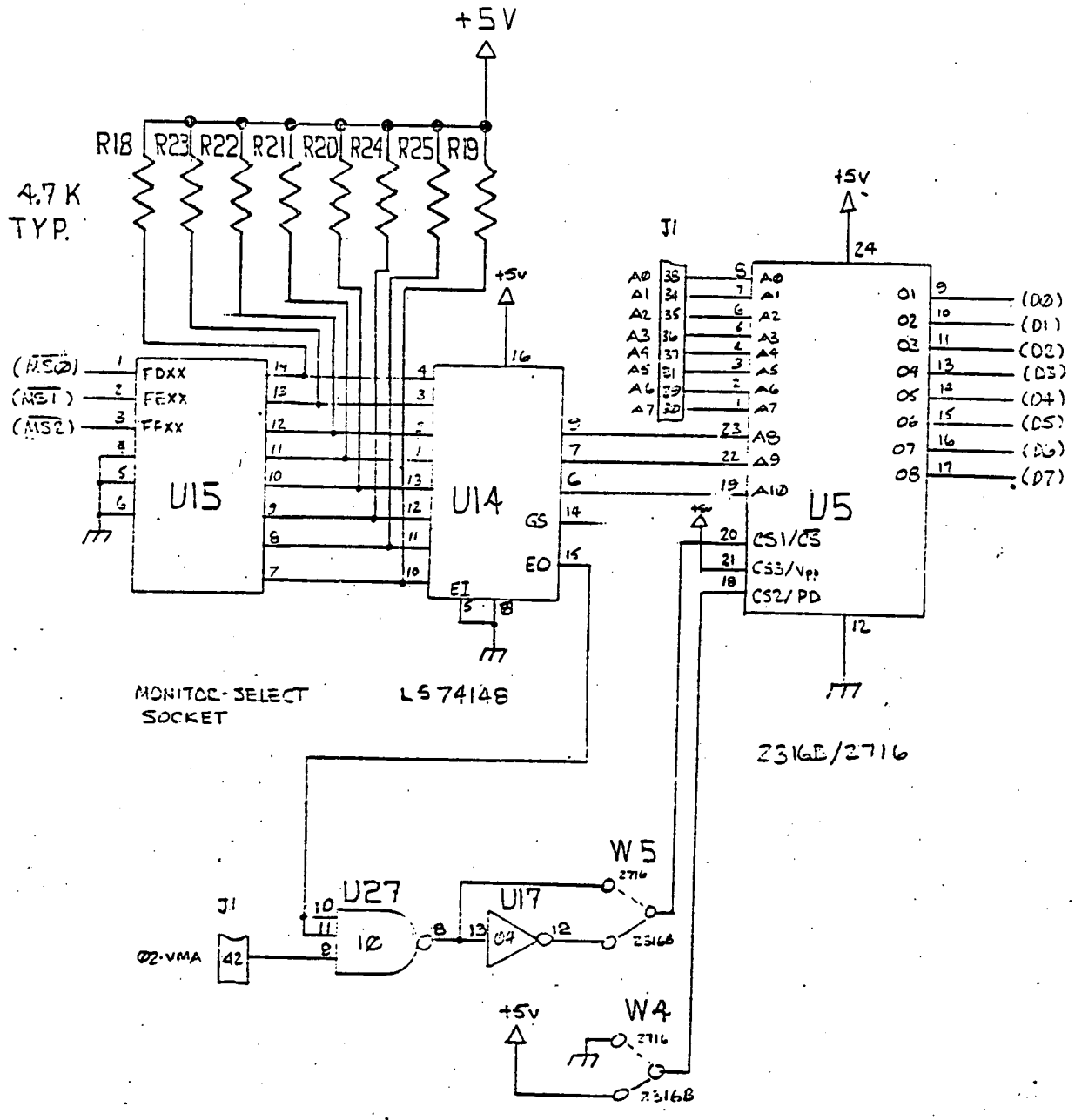


| OHIO SCIENTIFIC | product name/number MODEL 502 - (MONITOR ROM) | | | |
|---|---|---|---|---|
| date | revision | page | status | sheet 5 of 12 |

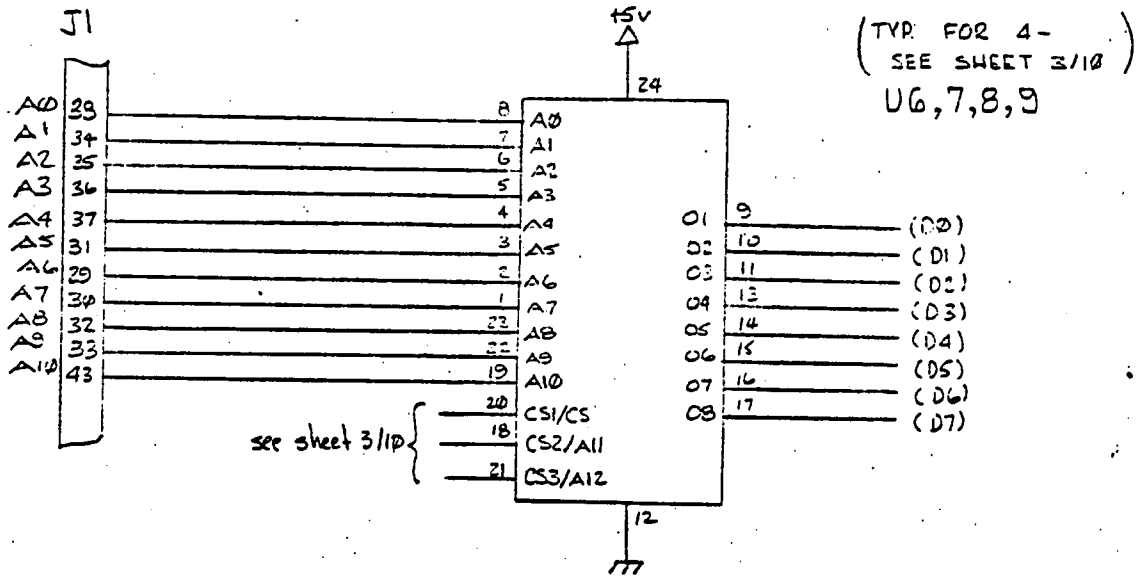


| OHIO SCIENTIFIC | product name/number MODEL 502- (BASIC BOARD) | | | |
|---|---|---|---|---|
| date | revision | page | status | sheet 6 of 12 |

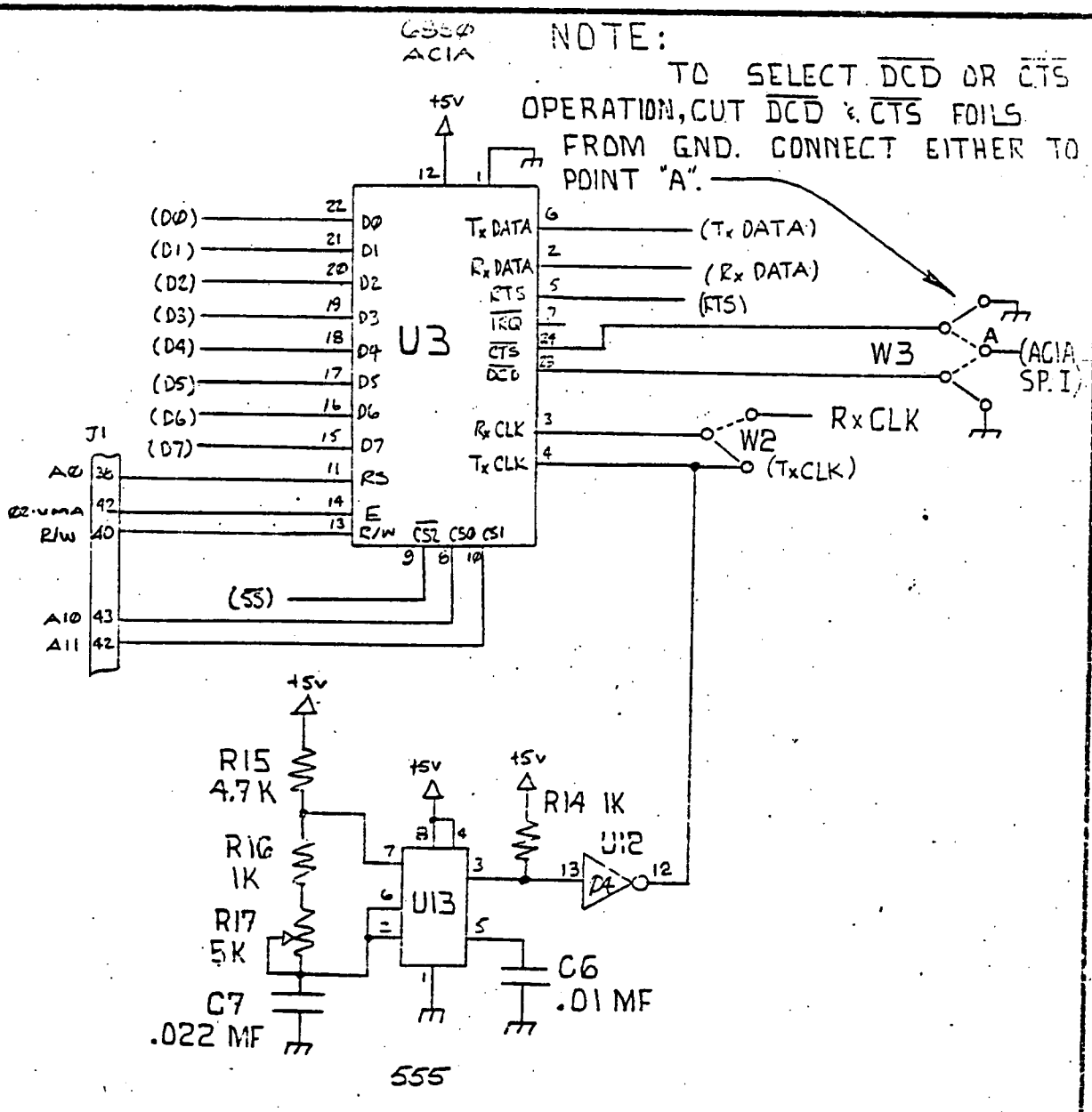


| OHIO SCIENTIFIC | product name/number MODEL 50C- (AUDIO CASSETTE) | | | |
|---|---|---|---|---|
| date | revision | page | status | sheet 7 of 12 |

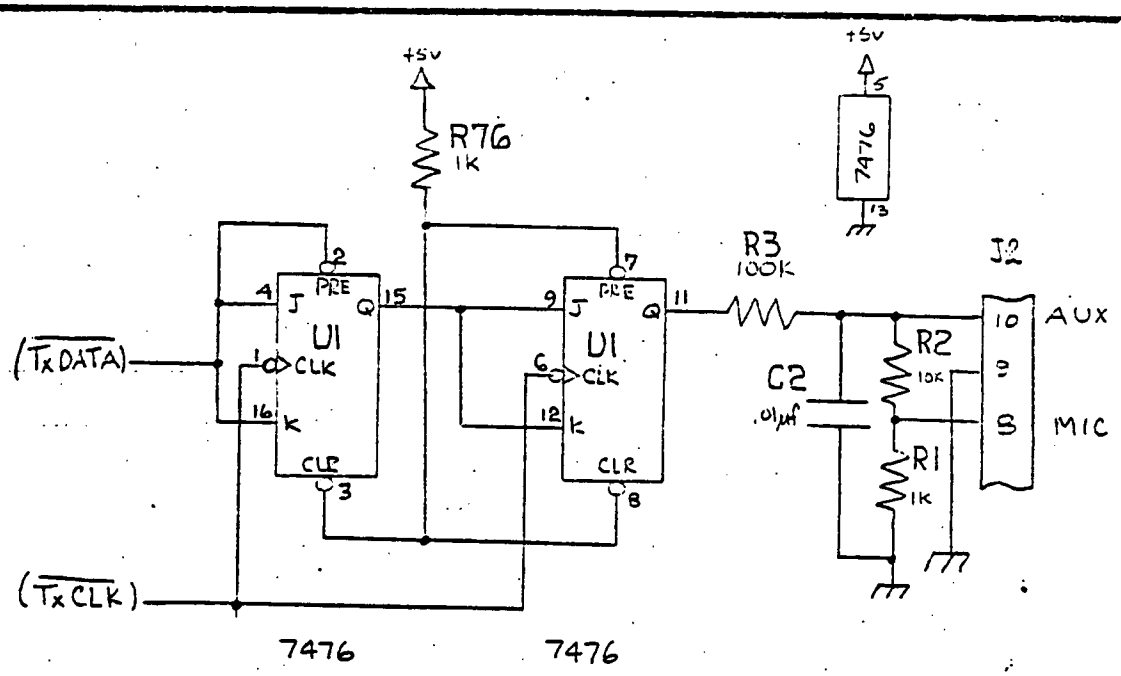


TRANSMITTER

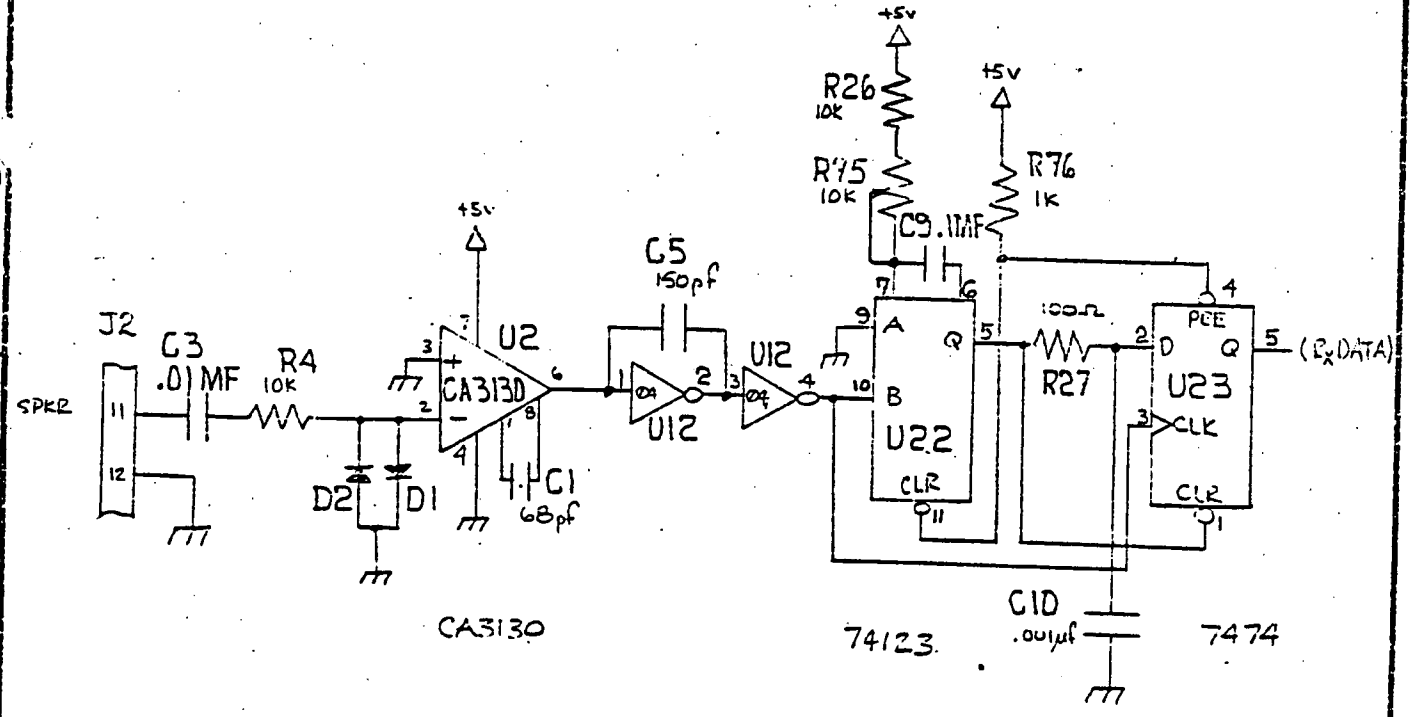


RECEIVER

| OHIO SCIENTIFIC | | | product name/number MODEL 502 - (AUDIO CASSETTE) | |
|---|---|---|---|---|
| date | revision | page | status | sheet 8 of 12 |

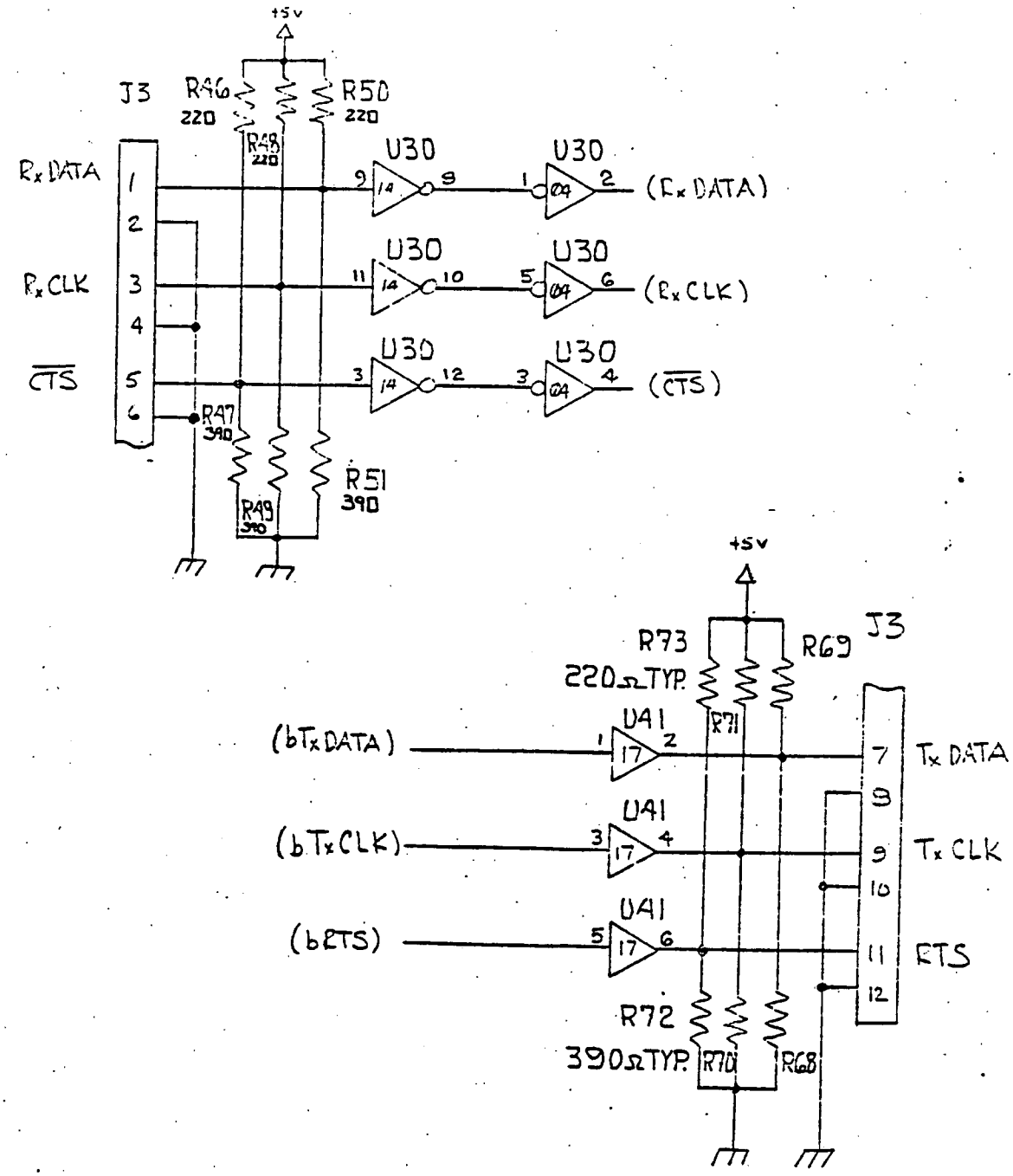


| OHIO SCIENTIFIC | | | product name/number MODEL 502 - (SYNCHRO. INTERFACE) | |
|---|---|---|---|---|
| date | revision | page | status | sheet 3 of 12 |

J3

(Reserved for synchronous I/O)

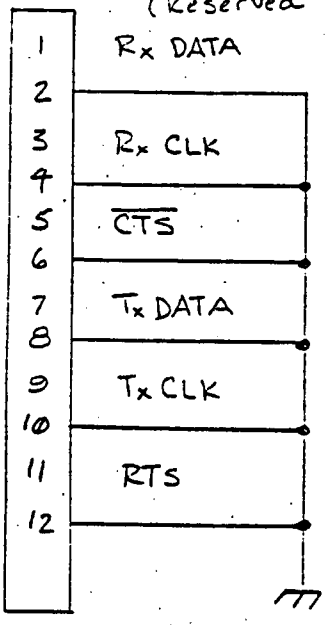


J2

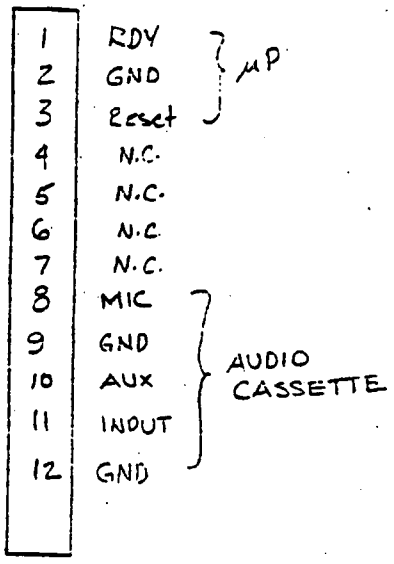


| OHIO SCIENTIFIC | | | product name/number MODEL 502 - (CONNECTORS) | |
|---|---|---|---|---|
| date | revision | page | status | sheet 10 of 12 |

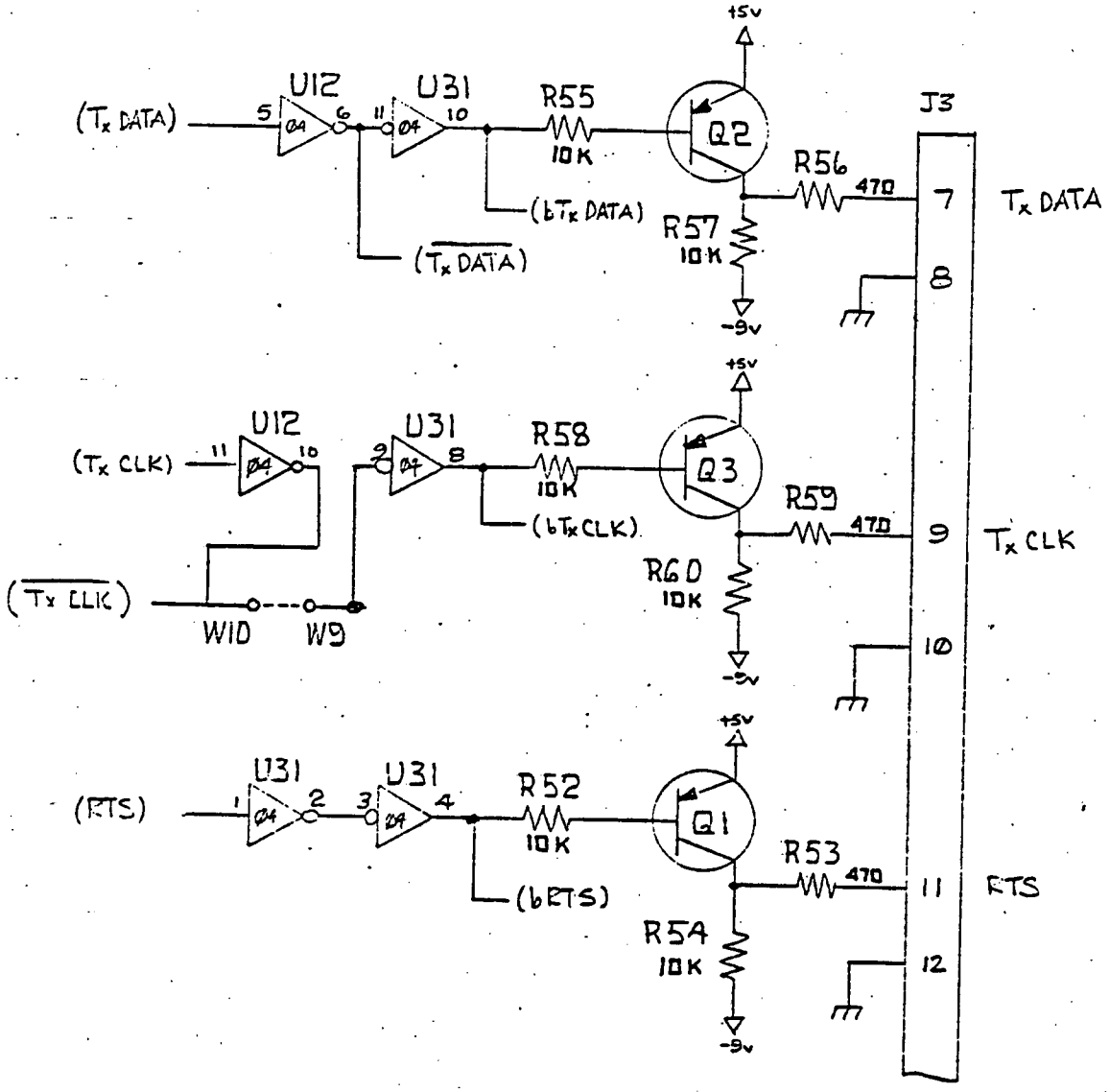


RS232 DRIVERS

| OHIO SCIENTIFIC | | | product name/number MODEL 502 - SYNCHRO INTERFACE, RS232 | |
|---|---|---|---|---|
| date 26 APR 1978 | revision | page | status | sheet 11 of 12 |

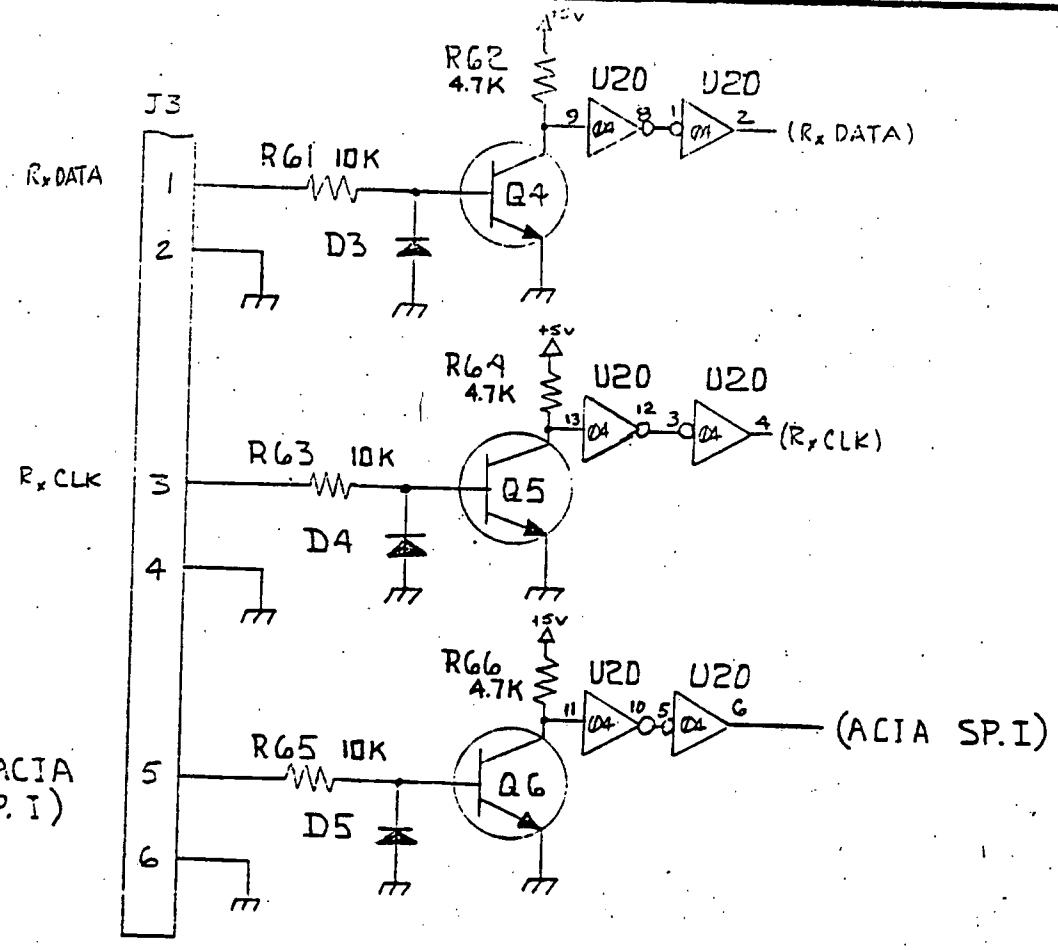


RS232 RECEIVERS

| OHIO SCIENTFIC | | | product name/number MODEL 530 - (SYNCHRO. INTERFACE, RECEIVER) | |
|---|---|---|---|---|
| date 26 APR 1978 | revision | page | status | sheet 12 of 12 |